IMPORTANT SAFETY INFORMATION

1. **Environmental influences**

   WARNING! Never aim the lens of the device directly at intense heat sources such as the sun or laser equipment. The objective lens and eyepiece can function as a burning glass and damage the interior components. The warranty does not cover damage caused by improper operation.

2. **Risk of swallowing**

   Caution: Do not place this device in the hands of small children. Incorrect handling can cause small parts to come loose which may be swallowed.

3. **Safety instructions for use**

   - Handle the device and battery with care.
   - Do not expose the device to fire or high temperatures.
   - Only use the battery charger included in the delivery package.
   - The battery capacity decreases when operated in a cold ambient temperature. This is not a fault and occurs for technical reasons.
   - Always store the device in a dry, well - ventilated space.
   - For prolonged storage, remove the batteries.
   - Do not expose your device to extreme temperatures lower than - 20°C and higher than + 50°C.
   - The product shall only be connected to a USB Type C interface.
   - If the device has been damaged, send the device to our after - sales service for repair.

4. **Safety instructions for the power supply**

   - The device can adapt to external power by connecting the USB cable supplied in the package with USB charger.
   - Do not use the power supply unit in wet or humid environments.
   - Only use the original cable provided with the battery charger.
   - Do not make any technical modifications.

5. **Disposal of batteries**

Directive 2006/66/EC (battery directive): This product contains a battery that cannot be disposed of as unsorted municipal waste in the European Union. For battery details, refer to the documentation of the specific product. The battery is marked with this symbol, which may include Cd (indicating cadmium), Pb (indicating lead), or Hg (indicating mercury). For proper recycling, please return the battery to your supplier or send it to a designated collection point.

6. **User information on the disposal of electrical and electronic devices(private households)：**

2012/19/EU (WEEE directive): Products marked with this symbol cannot be disposed of as unsorted municipal waste in the European Union. For proper recycling, please return this product to your local supplier when purchasing a new equivalent product, or send it to a designated collection point.

7. **For business customers within the European Union**

Please contact your dealer or supplier regarding the disposal of electrical and electronic devices.

8. **Information on disposal in other countries outside of the European Union**

This symbol is only applicable in the European Union. Please contact your local authority or dealer if you wish to dispose of this product and ask for a disposal option.

9. **Intended use**

The device is intended for displaying heat signatures during nature observation, remote hunting observations and for civil use. This device is not a toy for children.

Use the device only as described in this instruction manual. The manufacturer and the dealer accept no liability for damages which arise due to non - intended or incorrect use.

10. **Function test**

- Before use, please ensure that your device has no visible damage.
- Test to see if the device displays a clear, undisturbed image.
- Check that the settings for the thermal imaging are correct.
- See the notes in the section Operation.

11. **Installing/removing the battery**

The MV series thermal imaging monocular is equipped with batteries. The batteries can be moved and charged, referring to the section Battery for details.

12. **Caution**

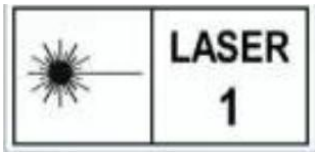

The MV series monocular contains laser, although which is in compliance with the Class1 Laser classification, please avoid aiming it to human eyes, and use other than as described in the user guide, repair, or disassembly may cause damage, which could result in hazardous exposure to infrared laser emissions that are not visible. This equipment should be serviced by producer or an authorized service provider.

Battery

MV series monocular are supplied with rechargeable 18650 Li-ion Batteries which allows operation for more than 4hours, it is designed with smart power management, which enable the user to install batteries into the device regardless of the polarity. Please Remember to charge the Battery Pack before first use.

- Connect the battery charger to a USB charger with the USB cable supplied.
- Put the battery into the slot correctly as per the "+/-" sign, If the battery is reversed or short-circuited, the charging protection starts, the charger stops charging.

Safety Precautions

Only use the charger supplied with the Battery. The use of any other charger may irreparably damage the Battery or the charger and may cause fire.

- Partial charging the battery is necessary if the battery is planned to be idled for long time. Avid fully charged or discharged.
- Don't charge the battery instantly while bring the battery from cold environment to warm environment. Leave 30 - 40 mins before charging.
- Don't leave battery unattended when charging
- Never use a damaged or modified charger.
- Charge the Battery at a temperature from 0°C to +45°C, otherwise the battery life will be reduced significantly.
- Don't leave the Battery with a charger connected and unattended, when charging is completed, please remove the battery and switch off the power supply in time.
- Do not expose the battery to high temperature or to a naked flame.
- Do not submerge the battery pack in water.
- Don't connect external device with a current consumption that exceed permitted levels.
- Don't dismantle or deform the Battery.
- Don't hit or drop the battery.
- The battery capacity may decrease when using the battery in negative temperature, that is normal, not a defect.
- Use only the same type of battery, do not mix the batteries in different type
- Keep the battery out of the reach of children.

External Power Supply

MV series monocular supports external power supply, such as the mobile power bank (5V) or USB charger for cell phone.

- Connect the external power supply to the USB port on the device.
- The device will switch to operation from external power supply, and the battery will be slowly charged.
- The device can be connected to external power supply but without the Battery installed.
- While external power supply is disconnected, the device will switch to the Battery Pack without powering off.

Technical Specification

Models		MV2	MV3	MV6
Detector Type		Uncooled Microbolometer		
Resolution		256×192	384×288	640×512
Spectral Range		8 μm ~ 14 μm		
NETD		≤40mK@ 25°C, @ F/1.0		
Pitch Size		12 μm		
Lens Option		15mm(std.) / 19mm	25mm / 35mm（std.）	
FOV		11.6°×8.7°(15mm) 9.2°×6.9°(19mm)	10.5°×7.9°(25mm) 7.5°×5.6°(35mm)	17.5°×14°(25mm) 12.5°×10°（35mm）
Display Type		Color OLED, monocular		
Display Size		0.39” 1024×768		
FPS		50Hz		
Image Patterns		White Hot, Black Hot, Red Hot, Iron, Rainbow		
Digital Zoom		1× / 2× / 3× / 4×		
Working Temperature		-20 ℃ ~ +55 ℃		
Features	PIP	×	√	√
	Hot Track	×	√	√
	Laser indicator	Optional	√	√
	LRF(1km)	Optional	√	√
	WIFI	√	√	√
	Snapshot	√	√	√
	Video Recording	√	√	√
	Crosshair	√	√	√
	Digital compass	√	√	√
Memory（Built-in）		64G（512GB Max）		
Encapsulation		IP65		
Weight		≤ 400g (includes battery)		
Size (L ×W ×H)		≤ 180mm ×75mm×55mm		
Connectors		Type C		
Power Supply		Battery ICR18650, 1 each		

Package Content

Item	Qty
MV series Monocular	1
18650 Battery	2
Battery charger	1
Data cable	1
Video cable	1
Portable bag	1

Component and control

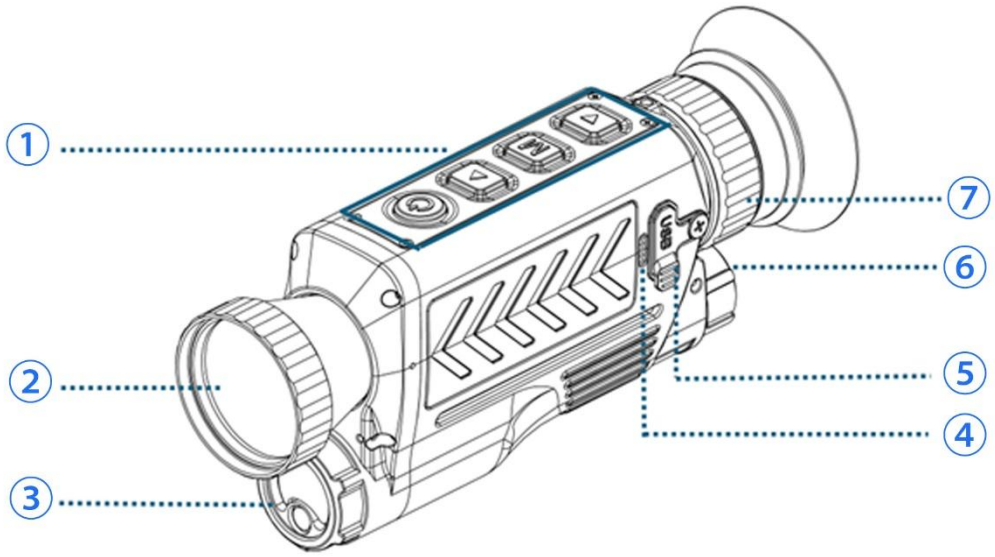

①. Control Panel
【Power/Up/Menu/Down】

②. Infrared Lens

③. Laser Rangefinder

④. Microphone

⑤. USB C port

⑥. Battery Cover

⑦. Eyepiece Adjustment Ring

Home Screen

Description of control

Button	Current status	Short press	Long press
Power button	Device is off	-	Power on
	Home screen	OLED off -	Power off
	Main menu/ Submenu	Return to upper menu	Power off
Zoom / Up button	Home screen	Digital zoom and PIP	Laser indicator on/off
	Main menu/Submenu	Navigation upwards / Digi +	-
Menu button	Home screen	Color palettes switch	Enter main menu
	Main menu	Enter submenu	-
	Submenu	Switch between options/ confirm	-
Camera / Down button	Home screen	Take a picture	Video recording
	Main menu/Submenu	Navigation downwards / Digi -	-
	Video recording	Take a picture	Stop and save video

Power-on / Off

- Remove the lens cover
- Press and hold down the Power button to turn on the monocular.
- Rotate eyepiece diopter adjustment ring until images in eyepiece are clear. After this, there is no need to rotate the eyepiece adjustment ring for distance or any other conditions.
- Rotate the lens to focus on the object and get the clear image.
- After use, hold down the Power button for about 3 seconds, the device will be power off. In the Home screen, short press the Power button to enter the sleep mode, short press any button to wake up.

Digital zoom and PIP

The MV series supports digital zoom of images to increase visual magnification.

- On the home screen, short press the Zoom button to perform the digital zoom and PIP in cycle as: 1x➔2x➔ 3x➔4x➔PIP;
- The corresponding visual magnification is displayed in the right corner at the top.
- The image in the PIP is 2x of the same in the main screen.
- Digital zoom is disable under PIP mode.

Laser Indicator

- Press down the Zoom button for 3sec. The laser indicator will be turned on/off, and user can pinpoint the target precisely with the laser indicator, and a red dot will be shown at the bottom of the screen.

Set Pseudo-color Palettes

- In Home screen, short press the Menu button to switch between White Hot, Black Hot, Red Hot, Iron and Rainbow.

Take Photos and Videos

MV series is equipped with a function for video recording and photography of the observed image which is saved on the built - in 64 memory storage. The photo and video files are named with time, so it is suggested to reset the date and time in the Main Menu before using the photo and video functions (refers to Main Menu - Settings - Date Setting in this manual).

Photography

- Press the Camera button in the home screen to take a photo. The image freezes for 0.5 sec with a camera icon appears on the screen.

Video Recording

- In the home screen, press and hold down the Camera button to start video recording.
- When the video recording starts, the icon and the video recording timer displayed in the HH:MM: SS (hour: minute second) format will appear on the screen.
- When recording, short press the Camera button to take a photo.
- Press and hold Camera button to stop and save the video recording.

Main Menu

In home screen, Long press the Menu button to enter the Main Menu. The submenu is listed on the left side, and the button instruction is showed on the right side, which is corresponding to the physical button on the device.

Album

In the Album menu, user can review, playback or delete the photos or videos saved in the built-in memory.

- Short press the Menu Button to enter the album, use the Up or Down button to select the video or photo in the pop-up window, short press the Menu button to select, then the pop-up window will show the file list, select the file to review or playback by short pressing Menu button. Short press the Power button to return to previous menu.

- While reviewing or playing back, the right side of the screen will show “<” ,representing “previous file”; “>”, representing “next file”, “▶”representing playback(for video only) and a “dustbin icon”, representing deleting. Switch between the option by short pressing Up/Down button, the selected option will turn **Blue**, and confirm by short pressing Menu button. When deleting option is selected, a window will pop-up and requested confirmation, select Confirm to delete or Cancel to return to playback mode.

Ranging

The MV series is an integrated rangefinding model that supports accurate rangefinding of up to 1,000m.

- Select and enter the Ranging submenu, and short press the Menu button to activate the ranging;
- A ranging cross will show at the center of the screen, and the device will perform ranging continuously, the ranging result is shown on the top of the screen.
- Repeat the above to deactivate the ranging mode.

Brightness

User can adjust the brightness of the display in high, middle and low level.

- Select and enter the Brightness submenu, and short press the Up/ Down button to select between High/Middle/Low option, and short press Menu button to confirm.

Cross

User can set a cross on the screen for precise aiming.

- Select and enter the Cross submenu, and short press the Menu button to activate the cross, which will be shown at the screen, and user can set the color and coordinates of the cross in the pop-up submenu. Repeat the same to deactivate the cross.
- **Color**: Select Color in the Cross submenu, short press the Menu button to activate the options, and short press the Up or Down button switch between White, Black and Yellow and press the Menu button again to confirm.
- **Xaxis**: Select Xaxis in the Cross submenu, press the Menu button to activate the option, and adjust the displayed number with the Up or Down button to move the cross along the X axis.
- **Yaxis**: Select Yaxis in the Cross submenu, press the Menu button to activate the option, and adjust the displayed number with the Up or Down button to move the cross along the Y axis.

HotTrack

Select and enter the HotTrack submenu, and short press the Menu button to activate or deactivate the HotTrack. When the HotTrack is on, a black square will show, and it will track the place with the highest temperature on the screen.

Compass

MV series can help user to find out directions during object detection with digital Compass, and compass calibration is available to improve the positioning accuracy and stability.

- Select and enter the Compass submenu, and short press the Up or Down button to switch on/off the compass, or choose the relevant options in the list.
- **On**: short press Menu button to confirm turning on the compass; when the compass is on, the azimuth angle will be shown at the top of the main screen, pitch angle and roll angle will be shown at both sides.
- **Off**: short press Menu button to confirm turning off the compass; the azimuth angle, pitch angle and the roll angle will not be shown.
- **Only Direction:** short press Menu button to confirm turning on the compass, but with the azimuth angle only.
- **Calibration:** short press Menu button to enter the submenu, and a message and figure will pop-up, keep performing calibration with the instruction as

the " ∞ ", which will enable the device direction pointing to all 8 quadrants of space. when the countdown completed, calibration will be completed as well.

Image Calibration

In the Image Calibration menu, user can choose to enable the device to perform image calibration and shutter, which can equalize the detector temperature and eliminate the image defects.

- **Calibration:** short press the Menu button to enter the calibration, and follow the instruction on the screen to perform the calibration.
- **Shutter**: select the Shutter, and short press the Menu button to perform shutter manually.

Settings

The Settings menu allows users to turn on the WIFI, choose a system language, set system time, view and format system storage, restore to factory settings and view device serial number and version information.

WIFI:

User can connect the device with the phone via WIFI to view image or video on the phone via the APP(for Android system only).

- Short press the Menu button to tune on/off WIFI, the WIFI icon will be shown at the bottom, and it is named in the pattern of XfdApxxxxxxxxxxxx, which is generated in production and cannot be renamed.
- Find and connect to the WIFI above, there is no Password needed.

Language:

User can choose English, Chinese, Japanese, German, Spanish, Portugues, French, Italian, Polish, Czech, Nederland and Traditional Chinese in the language options. Short press the Menu button to enter the language submenu, and select the language with Up or Down button, and press Menu button to confirm.

Date

Short press the Menu button to enter the Date submenu, short press the Menu button again to enter and Up or Down button to set the Year, Month, Day, Hour and Minute with the same step, and short press the Menu button again to confirm.

Storage

Short press the Menu button to enter the Storage submenu, and the memory status and format option will be shown. To perform Format, short press Menu button, a window will pop-up for confirmation, short press the Up or Down button to switch between Yes/No/Fast Format option, the selected option will be highlighted in a red box, and short press Menu Button to confirm or short press Power button to exit.

Reset Factory

Short press the Menu button to enter the Factory reset submenu, follow the instruction of the pop-up window to exit or reset.

Short press Menu button to exit or long press the Menu button to reset.

Device Info

To view the device information, short press the Menu button to enter the submenu and choose Device Info. user can check the device serial number and version information.

Technical Inspection

It is recommended to carry out a technical inspection each time before using the device. Check the following:

- The appearance (there should be no cracks on the body).
- The condition of the object lens and eyepiece (there should be no cracks, greasy spots, dirt or other deposits).
- The state of rechargeable battery (it should be charged).
- The controls/buttons should be in working order.

Maintenance

The maintenance should be carried out at least twice a year and includes the following steps:

- Wipe the external surface of metal and plastic parts off dust with a cotton cloth. Silicone grease may be used for cleaning process.
- Clean the electric contacts and battery slots on the monocular using a non - greasy organic solvent.
- Check the optics of the lens and the eyepiece. If necessary, remove the dirt and sand from the optics (it is perfect to use a non - contact method).
- Cleaning of the exterior of the optics should be done with cleaners designed especially for this purpose.